SITEMAP

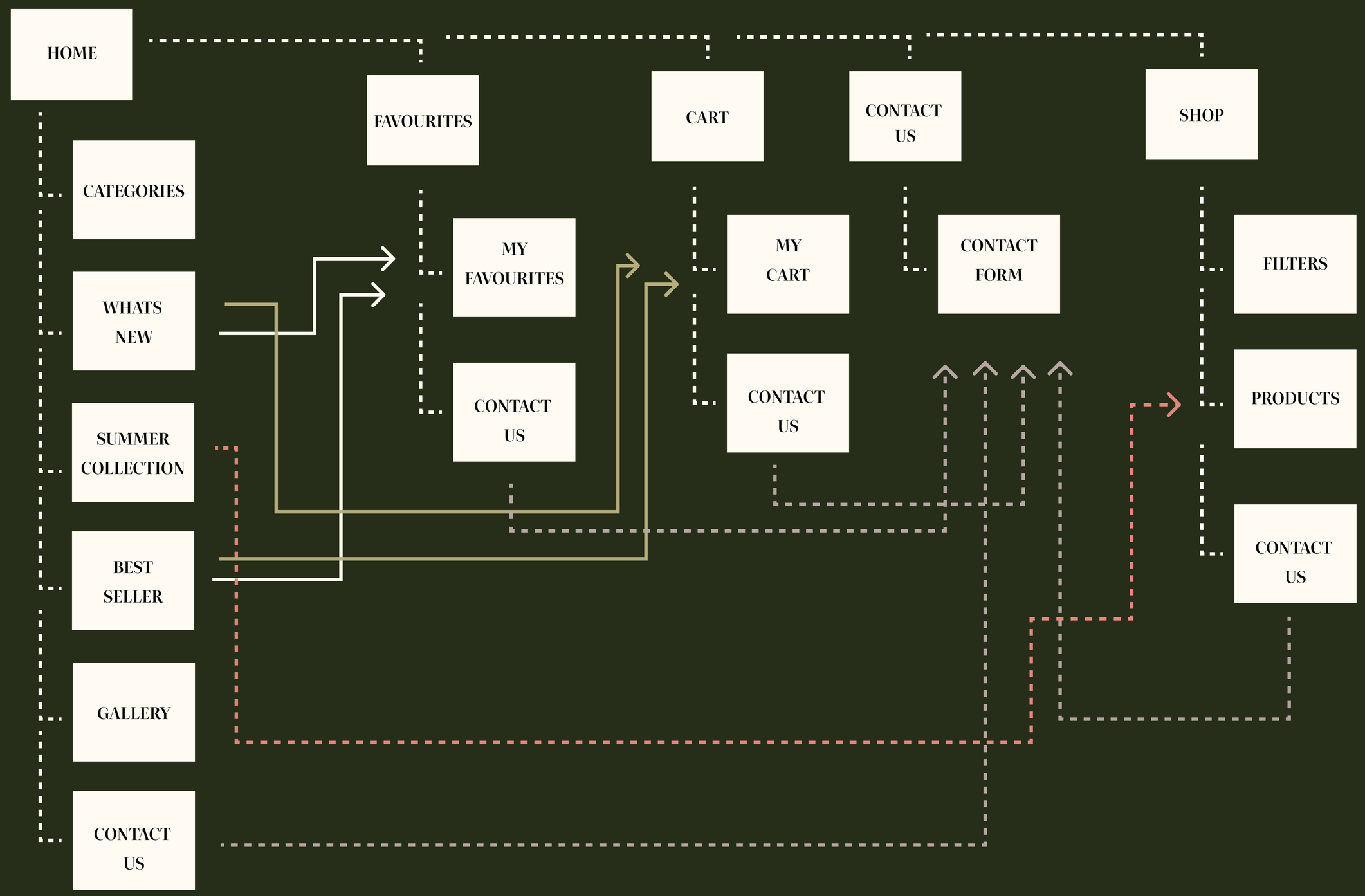
HOME
CATEGORIES
WHATS NEW
SUMMER COLLECTION
BEST SELLER
GALLERY
CONTACT US
FAVOURITES
MY FAVOURITES
CONTACT US
CART
MY CART
CONTACT US
CONTACT US
CONTACT FORM
SHOP
FILTERS
PRODUCTS
CONTACT US